MANUAL STEERING GEAR 2K

INDEX

GENERAL

The manual steering gear used on Jeep vehicles is a recirculating ball design (fig. 2K-1). The steering gear wormshaft and ball nut are in line with the steering shaft in the column. Steering ratio of this unit is 24:1.

The steering gear wormshaft and column steering shaft are connected by a removable flexible coupling. The coupling permits independent removal of the steering gear or column.

The steering gear ball nut is mounted on the wormshaft and is driven through steel ball bearings which circulate in the spiral grooves machined in the wormshaft and ball nut. The bearings act as a rolling thread between the wormshaft and ball nut. The ball nut is directly engaged by the pitman shaft sector teeth.

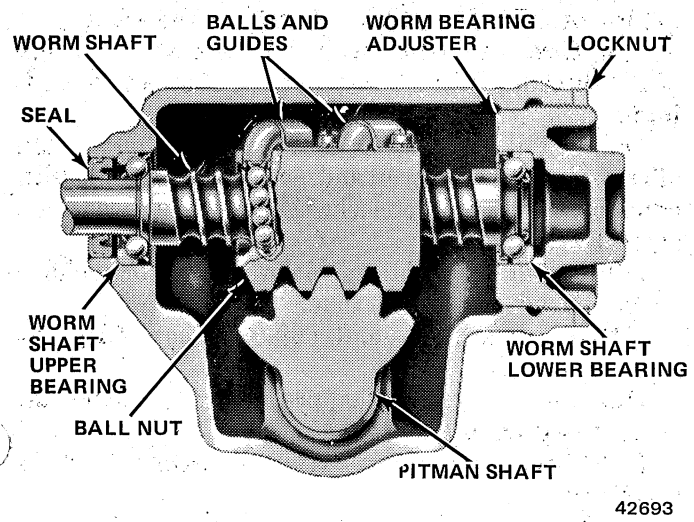

Fig. 2K-1 Recirculating Ball Manual Steering Gear

ON-VEHICLE SERVICE

Steering Gear Adjustment

Adjustments are generally made to compensate for normal wear in the gear or to correct a handling problem caused by improper adjustment. Correct adjustment results in a definite drag or preload but does not cause excessive steering effort through any point of the turn.

CAUTION: *Adjust the steering gear in the following sequence only. Failure to do so could result in damage to the gear or improper steering response. Always adjust worm bearing preload first; then adjust pitman shaft overcenter drag torque last.*

Worm Bearing Preload and Pitman Shaft Overcenter Drag Torque

(1) Raise vehicle and remove crossmember cover, if equipped.

(2) Check and correct steering gear mounting bolt torque, if necessary.

(3) Mark pitman arm and steering gear pitman shaft for assembly reference.

(4) Remove pitman arm nut and remove pitman arm using Puller J-6632 (fig. 2K-2).

(5) Loosen pitman adjusting screw locknut and back off adjusting screw 2 or 3 turns.

(6) Remove horn button and cover.

(7) Slowly turn steering wheel in one direction until stopped by gear; then turn wheel back 1/2 turn.

CAUTION: *Do not turn the steering wheel hard against the stop when the linkage is disconnected. This could result in damage to the steering gear ball return guides.*

(8) Install socket and inch-pound torque wrench on steering wheel nut.

(9) Measure worm bearing preload by rotating steering wheel through 90° arc (1/4 turn). Preload should be 5 to 8 inch-pounds (0.6 to 1 N•m).

NOTE: *Steering column misalignment or damage will affect torque readings. If rotating torque is exceptionally high, check the column alignment. If alignment is correct, remove the gear, determine the problem area, and repair as necessary.*

(10) If preload adjustment is necessary, loosen worm bearing adjuster locknut and turn adjuster clockwise to increase preload or counterclockwise to decrease preload.

(11) When desired preload is obtained, tighten adjuster locknut to 90 foot-pounds (122 N•m) torque and check preload again. Correct preload as necessary.

(12) Adjust pitman shaft overcenter drag torque.

CAUTION: *Do not attempt to adjust pitman shaft overcenter drag torque until after worm bearing preload has been adjusted.*

(13) Rotate steering wheel slowly from stop-to-stop and count total number of steering wheel turns.

(14) Turn steering wheel back 1/2 total number of turns to place gear on center; then turn wheel 1/2 turn off center.

(15) Install socket and inch-pound torque wrench on steering wheel nut.

(16) Measure torque required to turn gear through center of travel (this is overcenter drag torque). Drag torque should equal worm bearing preload torque plus 4 to 10 inch-pounds (.5 to 1 N•m) but must not exceed total of 18 inch-pounds (2 N•m).

Example:

Worm bearing preload is adjusted to 6 inch-pounds (0.7 N•m) torque. Over center drag torque is adjusted to 7 inch-pounds (0.8 N•m) in addition to worm bearing preload. This makes a total of 13 inch-pounds (1 N•m) which is acceptable.

(17) If adjustment is required, loosen pitman shaft adjusting screw locknut and loosen or tighten adjusting screw to obtain desired drag torque.

(18) Tighten pitman shaft adjusting screw locknut to 25 foot-pounds (34 N•m) after adjusting drag torque and recheck drag torque again. Correct adjustment if necessary.

(19) Install pitman arm. Index arm to shaft using alignment marks made at disassembly.

(20) Tighten pitman arm nut to 185 foot-pounds (251 N•m) torque and stake nut to shaft threads in one place.

(21) Lower vehicle.

(22) Correct steering wheel-to-steering shaft alignment if necessary and install horn button cover.

Pitman Shaft Seal Replacement

(1) Raise vehicle.

(2) Place front wheels in straight-ahead position.

(3) Mark pitman arm and shaft for assembly reference.

(4) Remove pitman arm using Puller J-6632 (fig. 2K-2).

(5) Remove seal using pointed tool or screwdriver with small blade.

(6) Inspect condition of gear lubricant. If contaminated and full of metal particles, remove and overhaul gear.

(7) Wrap pitman shaft splines with shimstock to protect replacement seal during installation.

(8) Lubricate lip of replacement seal with chassis lubricant, slide seal over shimstock and into seal seat in gear housing. Complete seal installation by tapping seal into place using small plastic mallet.

(9) Install pitman arm on shaft. Align arm and shaft using reference marks made at disassembly.

(10) Tighten pitman arm nut to 185 foot-pounds (251 N•m) torque and stake nut to shaft threads in one place.

(11) Lower vehicle.

Side Cover and Gasket Replacement

(1) Raise vehicle.

(2) Remove pitman shaft adjusting screw locknut.

(3) Remove side cover attaching bolts.

(4) Turn pitman shaft adjusting screw clockwise to remove cover from screw.

(5) Inspect condition of gear lubricant. If contaminated and full of metal particles, remove and overhaul gear.

(6) Coat replacement side cover gasket with chassis lubricant and position gasket on replacement side cover.

(7) Slide pitman shaft adjusting screw out of T-slot in pitman shaft. Do not lose adjusting screw shim.

(8) Thread adjusting screw into side cover to depth of 2-3 threads. Turn screw counterclockwise to start it into cover.

(9) Install adjusting screw in pitman shaft T-slot, align bolt holes in cover and gear housing, and turn adjusting screw counterclockwise until side cover seats against housing.

(10) Install and tighten side cover attaching bolts to 30 foot-pounds (41 N•m) torque.

(11) Install pitman shaft adjusting screw locknut finger-tight only.

(12) Adjust worm bearing preload and pitman shaft overcenter drag torque.

(13) Check and correct gear lubricant level as necessary.

(14) Lower vehicle.

Service Diagnosis

Condition	Possible Cause	Correction
HARD STEERING	(1) Incorrect tire pressure.	(1) Adjust.
	(2) Lack of lubrication.	(2) Lubricate steering linkage.
	(3) Tie rod ends worn.	(3) Replace rod ends.
	(4) Steering knuckle ball studs tight.	(4) Adjust or replace.
	(5) Steering gear parts worn.	(5) Overhaul hear.
	(6) Frozen steering column bearings.	(6) Replace bearings.
	(7) Lower coupling flange rubbing against steering shaft.	(7) Loosen bolt and assemble properly.
	(8) Steering gear adjusted incorrectly.	(8) Check adjustment. Disconnect pitman arm from gear or disconnect linkage from pitman arm and adjust gear if necessary.
	(9) Front spring sag.	(9) Check front end jounce height. It should be approximately the same at both wheels. Replace front springs if sagged.
	(10) Frame bent or broken.	(10) Repair frame as necessary.
	(11) Steering knuckle bent.	(11) Replace knuckle.
	(12) Ball stud galled or too tight.	(12) Replace ball stud.
	(13) Steering knuckle ball studs binding.	(13) Reseat or replace studs.
	(14) Steering gear or connections binding.	(14) Test steering system with wheels off floor. Adjust and lubricate.
LOOSE STEERING	(1) Tie rod ends worn.	(1) Replace rod ends.
	(2) Steering knuckle ball studs worn.	(2) Replace studs.
	(3) Steering gear parts worn.	(3) Overhaul gear.
	(4) Steering gear improperly adjusted.	(4) Adjust gear.
EXCESSIVE ROAD SHOCK	(1) U-bolts loose.	(1) Repair as necessary.
	(2) Wheel bearings loose.	(2) Adjust bearings.
	(3) Shock absorbers worn.	(3) Replace.
TURNING RADIUS SHORT ONE SIDE	(1) Center bolt in spring sheared off.	(1) Repair as necessary.
	(2) Axle shifted.	(2) Repair as necessary.
	(3) Steering arm bent.	(3) Replace.

REMOVAL

(1) Remove intermediate shaft-to-wormshaft coupling clamp bolt and disconnect intermediate shaft.

(2) Remove pitman arm nut and lockwasher.

(3) Remove pitman arm from steering gear pitman shaft using Tool J-6632 (fig. 2K-2).

(4) On Cherokee, Wagoneer and Truck models, remove bolts attaching steering gear to frame and remove gear.

(5) On CJ and Scrambler models:

(a) Raise left side of vehicle slightly to relieve tension on left front spring and place support stand under frame and remove crossmember cover, if equipped.

(b) Remove bolts attaching steering gear lower bracket to frame (fig. 2K-3).

(c) Remove bolts attaching steering gear upper bracket to frame rail and remove gear.

(d) Remove Torx Head upper bracket bolt using 9 inch (22.86 cm) extension and Torx Bit External Socket Tool J-25359-21 (fig. 2K-3).

(e) Remove remaining bolts attaching upper bracket to tie plate and lower bracket to steering gear and remove brackets from gear.

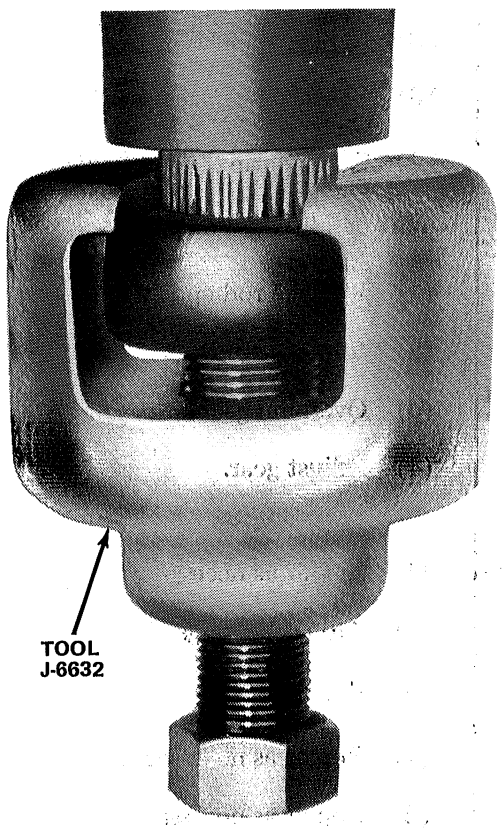

Fig. 2K-2 Pitman Arm Removal

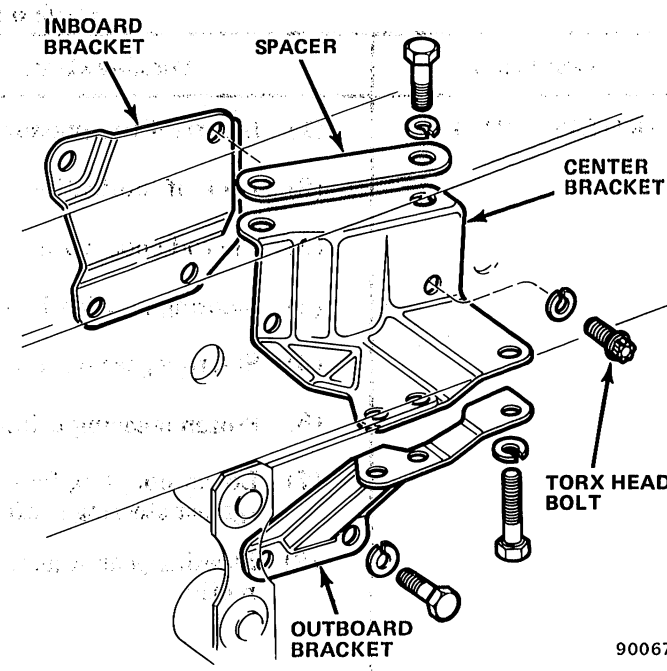

Fig. 2K-3 Steering Gear Mounting Brackets—CJ and Scrambler Models

INSTALLATION

NOTE: *Proper retention of the steering gear is important. Some of the following steps in gear installation require the application of Loctite 271 or similar material to attaching bolt threads. Wherever indicated, use Loctite 271 Adhesive/Sealant, or equivalent. Before applying this material, first clean all bolt threads thoroughly to remove dirt and grease and apply the material to the bolt threads no more than five minutes before installation.*

(1) On Cherokee, Wagoneer and Truck models:

(a) Apply Loctite 271, or equivalent, to steering gear-to-frame mounting bolts.

(b) Align and engage intermediate shaft coupling with splines on steering gear wormshaft.

(c) Position gear on frame and install gear attaching bolts. Tighten bolts to 70 foot-pounds (95 N•m) torque.

(d) Install intermediate shaft coupling pinch bolt and nut. Tighten nut to 45 foot-pounds (61 N•m) torque.

(2) On CJ and Scrambler models:

(a) Apply Loctite 271, or equivalent, to all steering gear mounting bracket attaching bolts.

(b) Position tie plate and upper and lower mounting brackets on steering gear and install mounting bracket-to-gear attaching bolts. Tighten hex-head bolts to 70 foot-pounds (95 N•m) torque. Tighten torx head bolt to 55 foot-pounds (75 N•m) torque using Torx Head External Socket Tool J-25359-21.

(c) Apply Loctite 271, or equivalent, to all steering gear-to-frame and crossmember mounting bolts.

(d) Align and engage intermediate shaft coupling with steering gear wormshaft splines.

(e) Position steering gear on frame and install remaining gear mounting bolts. Tighten bolts to 55 foot-pounds (75 N•m) torque and install crossmember cover, if equipped.

(3) Install intermediate shaft coupling clamp bolt and nut. Tighten nut to 45 foot-pounds (61 N•m) torque.

(4) Install pitman arm on pitman shaft and install lockwasher and pitman arm nut. Tighten nut to 185 foot-pounds (251 N•m) torque.

(5) On CJ and Scrambler models, remove support stand and hydraulic jack.

NOTE: *After the steering gear is installed, it may produce a slightly rough feel. To eliminate this roughness, turn the gear full left and right for 10 to 15 complete cycles.*

DISASSEMBLY

(1) Mount steering gear in vise. Clamp vise jaws on gear mounting bosses only.

(2) Place ball nut and pitman shaft in centered position. Rotate wormshaft stop-to-stop and count total number of turns. Turn wormshaft back 1/2 total number of turns to center shaft and nut.

(3) Remove pitman shaft adjuster screw locknut (fig. 2K-4).

(4) Remove side cover attaching bolts.

(5) Turn pitman shaft adjuster screw clockwise to unthread side cover from screw and remove side cover and gasket.

(6) Slide adjuster screw and shim out of T-slot in pitman shaft (fig. 2K-4). Retain shim and screw for end play measurement at assembly.

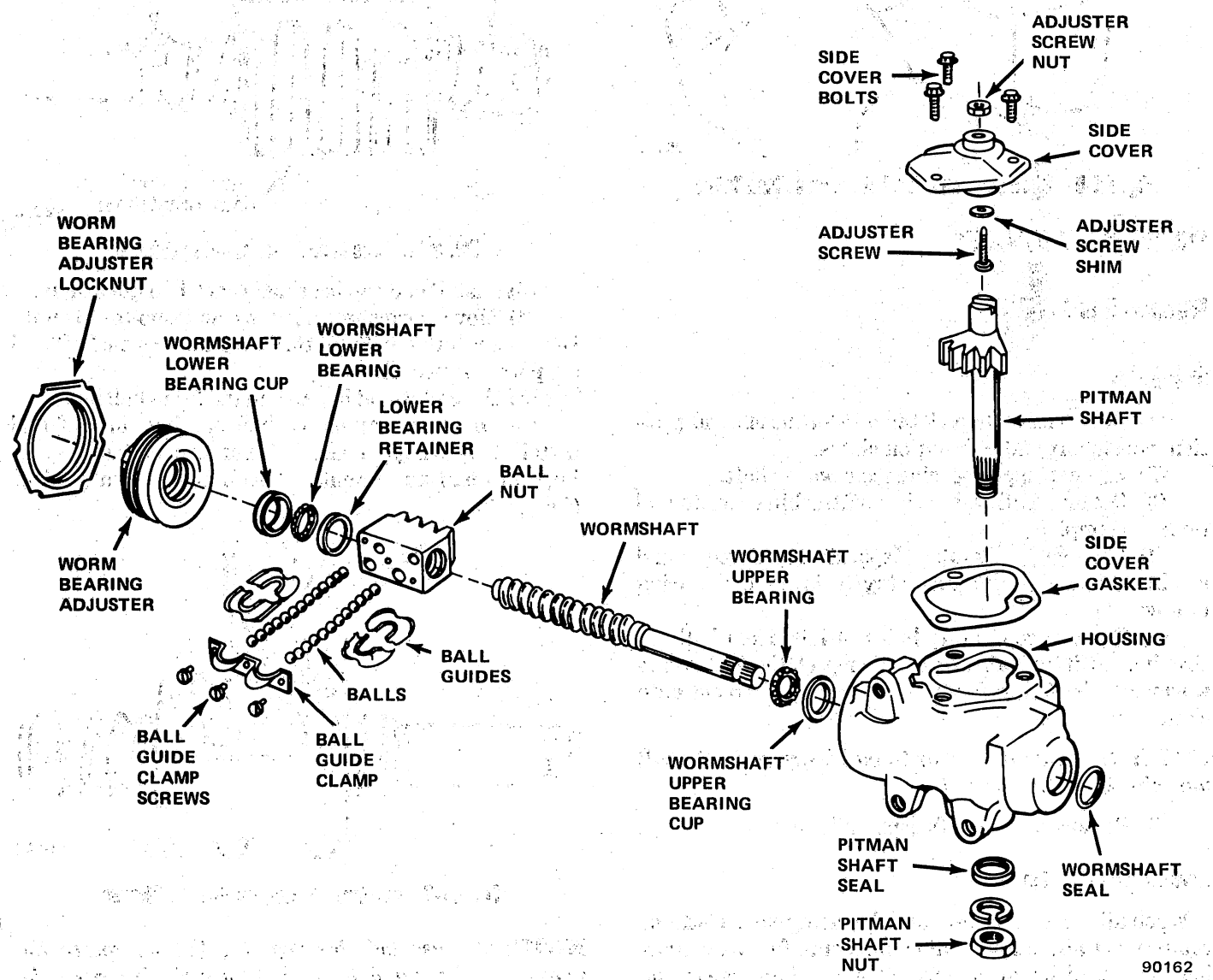

Fig. 2K-4 Manual Steering Gear

(7) Remove pitman shaft. If necessary, tap shaft lightly with plastic mallet to remove it.

(8) Remove worm bearing adjuster locknut.

(9) Remove worm bearing adjuster.

(10) Remove wormshaft and ball nut (fig. 2K-5).

CAUTION: *During service operations, do not allow the ball nut to rotate freely and bottom at either end of the wormshaft. This can damage the tangs at the ends of the ball guides.*

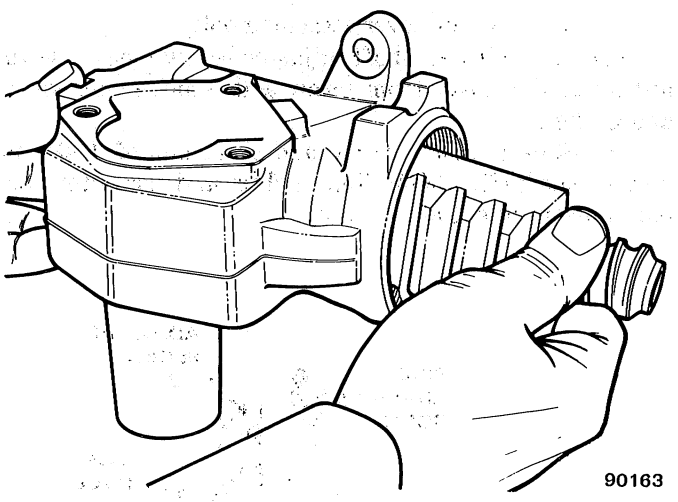

Fig. 2K-5 Wormshaft and Ball Nut Removal/Installation

SUBASSEMBLY OVERHAUL

Wormshaft and Ball Nut

Disassembly

(1) Place clean shop cloths on workbench and position wormshaft and ball nut on cloths.

(2) Remove upper bearing from wormshaft.

(3) Remove ball guide clamp attaching screws and remove clamp.

(4) Remove ball guides. Separate guide halves and retain ball bearings that stayed in guides during removal.

(5) Remove remaining ball bearings from ball nut circuits. Position ball nut over shop cloths and rotate wormshaft back and forth until bearings drop out onto cloth.

NOTE: *There are a total of 50 ball bearings in the ball nut with 25 in each circuit.*

(6) Remove wormshaft from ball nut.

Cleaning and Inspection

Wash all parts in solvent and dry using clean cloths or compressed air. Inspect all components for wear, scoring, cracks, nicks, or surface pitting and also check the upper bearing and ball bearings for flat spots. If the upper bearing is damaged, the upper bearing cup must also be replaced.

Assembly

(1) Position ball nut on workbench with ball guide holes facing upward and deep side of ball nut teeth facing edge of workbench (fig. 2K-6).

(2) Install wormshaft in ball nut from left side. Thread shaft into nut until equal number of shaft threads are visible at each end of nut (fig. 2K-6).

CAUTION: *The ball nut teeth are machined to a greater width and depth on one side. When assembling the wormshaft and ball nut, position the ball nut so the wider-deeper side of the teeth will face the housing side cover opening after installation (fig. 2K-6).*

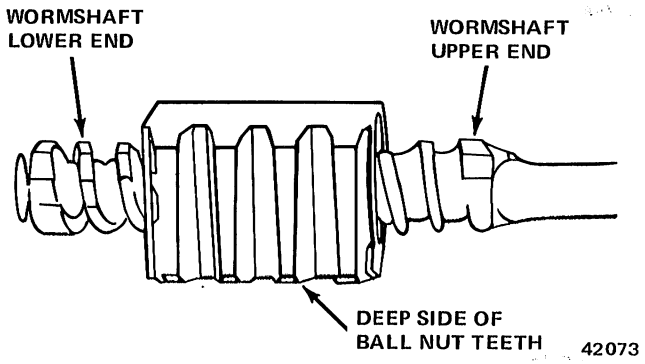

Fig. 2K-6 Positioning Wormshaft in Ball Nut

(3) Install one ball bearing in each ball guide hole.

(4) Move wormshaft up/down and side-to-side until bearings roll into ball nut threads under wormshaft and support wormshaft.

(5) Assemble and install ball guides in ball nut.

(6) Divide remaining 48 ball bearings in half and install 24 bearings in each ball nut circuit. Insert bearings into ball nut circuits through holes in ball guides (fig. 2K-7).

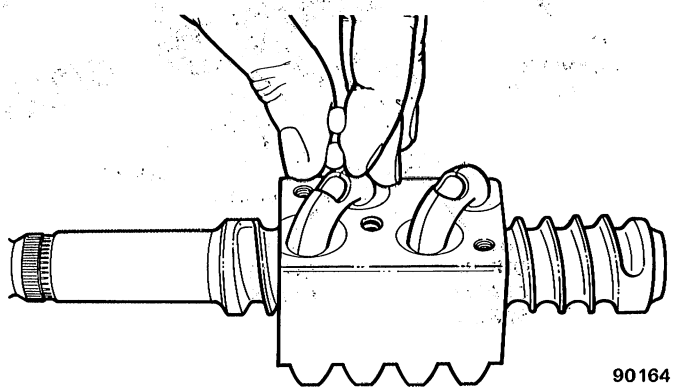

Fig. 2K-7 Installing Bearings in Ball Nut Circuits

NOTE: *To ease ball bearing installation, rotate the wormshaft back and forth slightly while inserting the bearings.*

(7) Position ball guide clamp on ball nut and install clamp attaching screws. Tighten screws to 4 foot-pounds (6 N•m) torque.

(8) Lubricate wormshaft threads with chassis grease and thread shaft in and out of ball nut to circulate grease.

CAUTION: *To avoid damaging the tangs on the ball guide ends, do not not allow the wormshaft to bottom in either direction.*

(9) Lubricate wormshaft upper bearing with chassis grease and install bearing on wormshaft.

Worm Bearing Adjuster

Disassembly

(1) Remove wormshaft lower bearing retainer from worm bearing adjuster. Use screwdriver to pry retainer out of adjuster (fig. 2K-8).

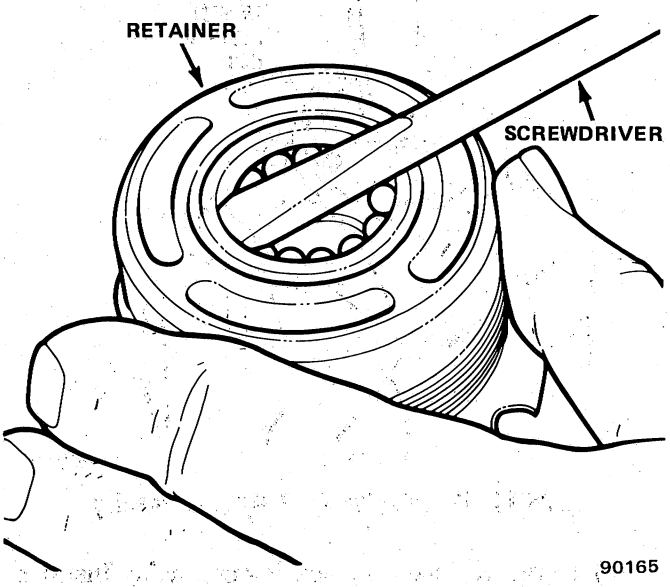

Fig. 2K-8 Removing Wormshaft Lower Bearing Retainer

(2) Remove wormshaft lower bearing from adjuster.

Cleaning and Inspection

Clean parts in solvent and dry using clean cloths only. Inspect all components for wear or damage and also inspect the bearing for flat spots or scoring. If either the lower bearing or bearing cup is damaged, both parts must be replaced.

Assembly

(1) If lower bearing cup is to be replaced, remove old cup and install replacement as follows:

(a) Install spare locknut on worm bearing adjuster and clamp adjuster in vise. Clamp vise jaws on locknut only.

(b) Assemble Puller J-5822 and Slide Hammer J-2619-01 (fig. 2K-9). Position puller legs under bearing cup and tighten puller screw to expand and hold legs in position. Bump outward with slide hammer weight to remove bearing cup.

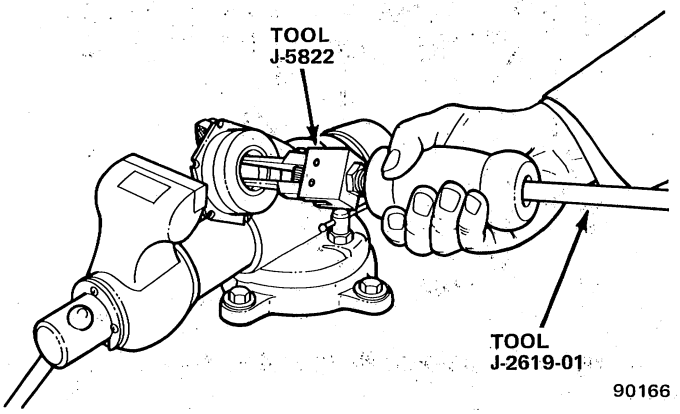

Fig. 2K-9 Removing Wormshaft Lower Bearing Cup

(c) Remove adjuster from vise and remove spare locknut from adjuster.

(d) Install replacement bearing cup in adjuster using Tool J-5755 (fig. 2K-10).

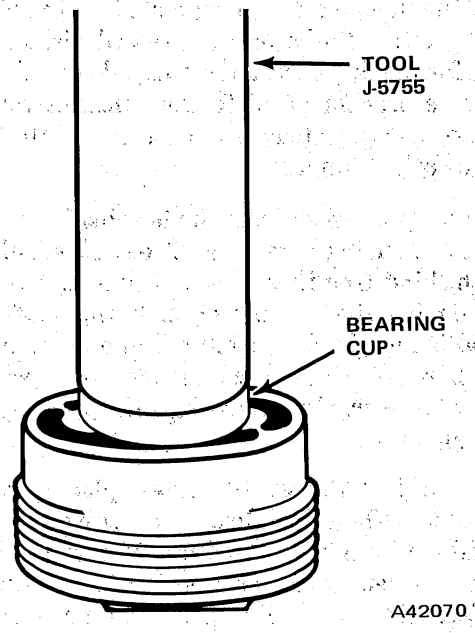

Fig. 2K-10 Installing Wormshaft Lower Bearing Cup

(2) Lubricate lower bearing with chassis grease and install bearing in adjuster.

(3) Install lower bearing retainer in adjuster. If necessary, tap retainer lightly with plastic mallet to seat it.

Steering Gear Housing and Pitman Shaft

Disassembly

(1) Remove pitman shaft and wormshaft seals from housing. Use screwdriver to pry seals out (fig. 2K-11).

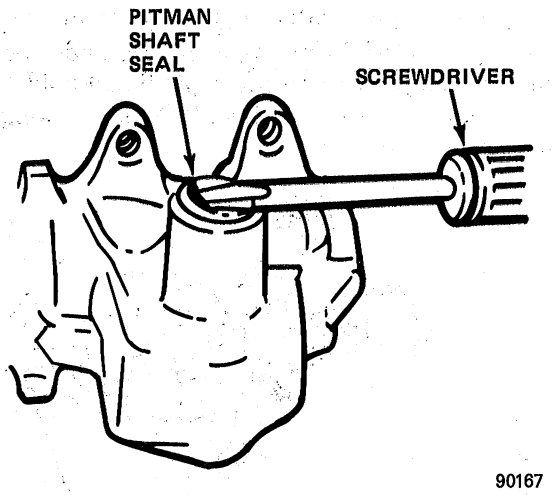

Fig. 2K-11 Removing Pitman Shaft and Wormshaft Seal

(2) Remove adjuster screw and shim from pitman shaft T-slot (if not removed previously). Retain screw and shim for end play check.

Cleaning and Inspection

Clean the housing and pitman shaft with solvent and dry using clean cloths or compressed air. Inspect the housing for cracks, porosity, damaged threads and gasket surface scoring or distortion. Inspect the pitman shaft bore contact surface and sector teeth for wear, pitting, or other damage.

Insert the pitman shaft in the housing bore and check for shaft or housing bore wear. The shaft should exhibit a smooth, bind free fit and not display any visible side play when installed in the bore. If the shaft appears loose and is not visibly worn, trial fit a new shaft in the housing bore. If the new shaft is also loose, replace the housing. However, if the new shaft fits properly, replace the pitman shaft.

Measure adjuster screw fit and end play in the pitman shaft T-slot. When installed, the screw must rotate freely and not bind in any position. Measure end play by inserting a feeler gauge between the screw head and T-slot surface (fig. 2K-12). End play must not exceed 0.002 inches (0.05 mm). If end play exceeds specified limit, select and install a replacement shim that will provide the specified clearance. Shims are furnished in four thicknesses; 0.063, 0.065, 0.067 and 0.069 inch (1.60, 1.65, 1.70 and 1.75 mm) and are available in kit form.

Inspect the wormshaft upper bearing and bearing cup for wear, looseness, flat spots, pitting, cracks, or other damage. If either the bearing or bearing cup is damaged, both parts must be replaced. If the cup is loose in the housing, trial fit a new cup. If the new cup is also loose, replace the housing. If the new cup fits properly, replace only the bearing cup.

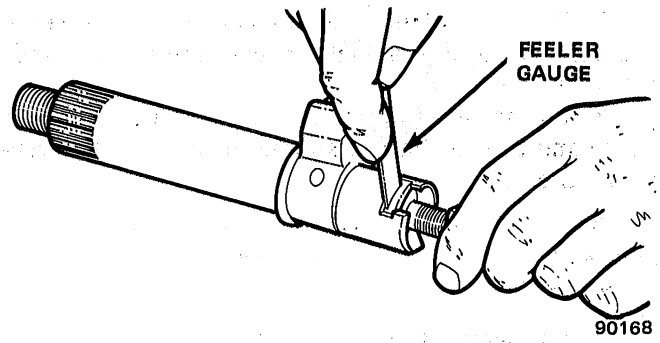

Fig. 2K-12 Measuring Adjuster Screw End Play

Assembly

(1) If wormshaft upper bearing cup is to be replaced, remove old cup using hammer and brass punch (fig. 2K-13).

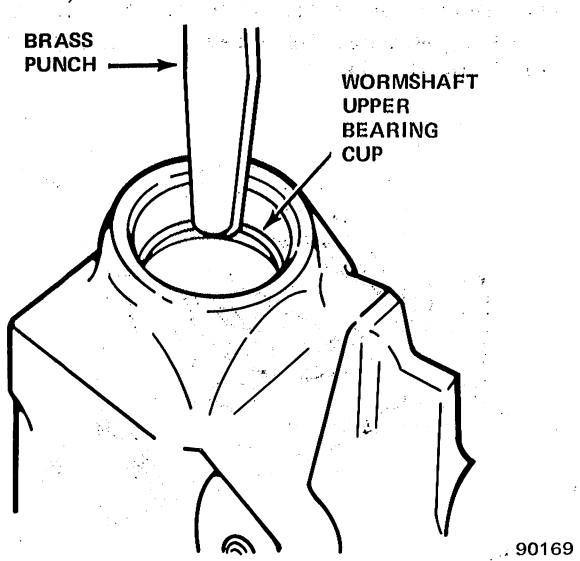

Fig. 2K-13 Removing Wormshaft Upper Bearing Cup

(2) Install replacement bearing cup using Installer J-5755 (fig. 2K-14).

NOTE: *Do not install the wormshaft or pitman shaft seals at this time. Refer to Assembly and Adjustment.*

ASSEMBLY AND ADJUSTMENT

(1) Lubricate all components with chassis grease if not lubricated previously.

(2) Place gear housing in vise. Clamp vise jaws on housing mounting bosses only.

(3) Install wormshaft and ball nut in housing.

CAUTION: *Be sure the ball nut is installed with the deep side of the ball nut teeth facing the side cover opening.*

(4) Install worm bearing adjuster in housing and tighten adjuster only enough to remove wormshaft end play.

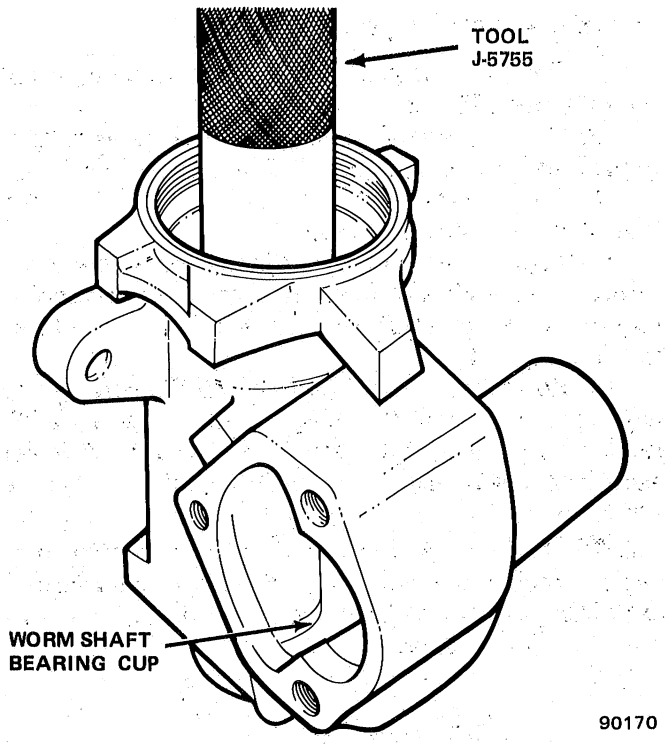

Fig. 2K-14 Installing Wormshaft Upper Bearing Cup

(5) Install locknut on worm bearing adjuster but do not tighten locknut at this time.

(6) Pack steering gear housing with as much chassis grease as possible.

NOTE: *In order to pack the maximum amount of grease into the housing, the ball nut must be moved back and forth for better access to the housing interior. Rotate the wormshaft in one direction until ball nut travel ceases. Pack the unobstructed housing end full of grease; then rotate the shaft in the opposite direction and repeat the packing procedure.*

(7) Place ball nut in centered position. Rotate wormshaft from stop to stop and count total number of turns. Turn wormshaft back 1/2 number of turns to center ball nut.

(8) Lubricate pitman shaft with chassis grease and install shaft in housing. Engage center tooth of shaft in center groove of ball nut (fig. 2K-15).

(9) Coat replacement side cover gasket with chassis grease and position gasket on housing side cover opening.

(10) Install end play shim on adjuster screw and thread screw into side cover to depth of 2-3 threads.

(11) Slide adjuster screw into pitman shaft T-slot and turn screw counterclockwise to thread it into cover. Stop turning screw when side cover almost contacts gasket.

(12) Align gear housing and side cover bolt holes and install cover attaching bolts finger-tight only (do not attempt to seat cover on housing by tightening bolts).

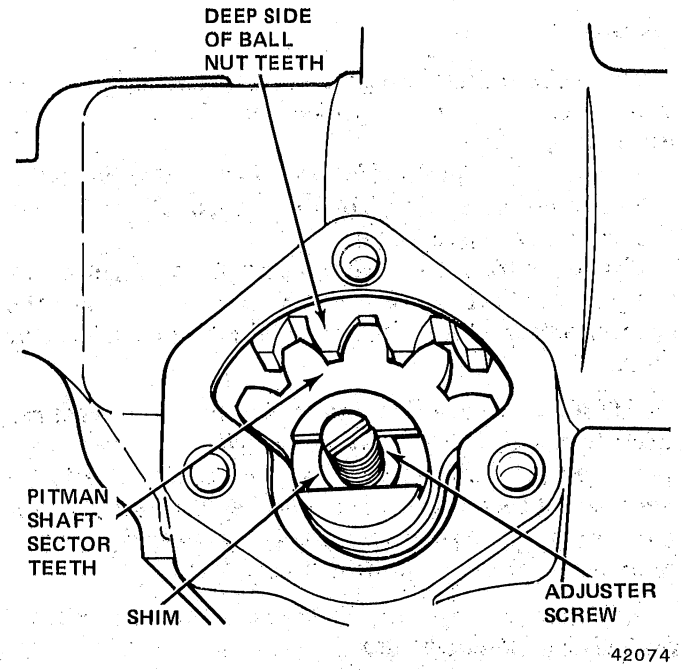

Fig. 2K-15 Pitman Shaft and Ball Nut In Centered Position

(13) Tighten adjuster screw until it bottoms and back off screw 1/2 turn.

(14) Tighten side cover bolts to 30 foot-pounds (41 N•m) torque.

(15) Install pitman shaft and wormshaft seals as follows:

(a) Wrap 0.005 inch (0.1 mm) thick shim stock (or single layer of thinnest tape available) around shaft splines and threads. Shim stock (or tape) will serve as seal protecter when seals are installed.

(b) Lubricate seals with chassis grease. Slide each seal over protective material and down shaft until seal contacts housing.

(c) Start seals into housing seal seats by hand. Complete seal installation by tapping seals into place using plastic mallet. Be sure each seal is fully seated in housing.

CAUTION: *Some type of protective wrap must be used during seal installation. If the seals are installed over exposed shaft splines or threads, the seal lips could be cut or distorted resulting in leakage after assembly.*

(16) Check gear operation. With adjuster screw backed off, wormshaft should rotate freely and without bind in either direction. Also check for grease leaks past seals. If gear binds, repair as necessary and recheck operation. If seals leak, replace them and recheck operation.

(17) Adjust steering gear worm bearing preload and overcenter drag torque. Refer to following adjustment procedure.

Adjustment

The recirculating ball gear requires two adjustments which are, worm bearing preload and pitman shaft overcenter drag torque.

Worm bearing preload is controlled by the amount of compression force exerted on the wormshaft bearings by the worm bearing adjuster.

Pitman shaft overcenter drag torque is controlled by the pitman shaft adjuster screw which determines the clearance between the ball nut and pitman shaft sector teeth.

CAUTION: *The following adjustment procedures must be performed exactly as described and in the sequence outlined. Failure to do so can result in damage to the gear internal components and improper steering response. Always adjust worm bearing preload first and pitman shaft overcenter drag torque last.*

Worm Bearing Preload Adjustment

(1) Tighten worm bearing adjuster until it bottoms, then back off adjuster 1/4 turn.

(2) Install socket and Torque Wrench J-7754 on splined end of wormshaft (fig. 2K-16).

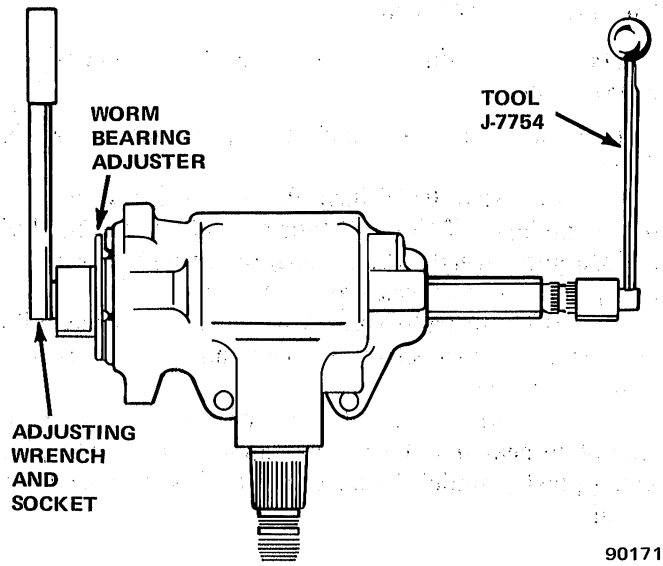

Fig. 2K-16 Adjusting Worm Bearing Preload Torque

(3) Rotate wormshaft clockwise to stop; then back off shaft 1/2 turn.

(4) Tighten worm bearing adjuster until torque required to rotate wormshaft is 5 to 8 inch-pounds (0.60 to 0.90 N•m).

CAUTION: *The preload adjustment must be made with the wormshaft turned back no more than 1/2 turn from either the right or left turn stop positions.*

(5) Tighten worm bearing adjuster locknut to 90 foot-pounds (122 N•m) torque. Recheck wormshaft rotating torque and readjust if necessary.

(6) Record worm bearing preload torque reading.

Pitman Shaft Overcenter Drag Torque Adjustment

(1) Rotate wormshaft from stop-to-stop and count total number of turns.

(2) Turn wormshaft back 1/2 total number of turns to place ball nut and pitman shaft in centered position.

(3) Install socket and Torque Wrench J-7754 on pitman shaft splines (fig. 2K-17).

(4) Tighten pitman shaft adjuster screw (while rotating shaft back and forth over center) until torque required to rotate shaft over center equals worm bearing preload setting.

(5) Rotate shaft over center and continue tightening adjuster screw until drag torque is increased by additional 4 to 10 inch-pounds (0.45 to 1.13 N•m) but do not exceed total of 16 inch-pounds (1.81 N•m).

CAUTION: *The total amount of over center drag torque (worm bearing preload setting plus additional 4 to 10 inch-pounds) must not exceed combined total of 16 inch-pounds (1.81 N•m).*

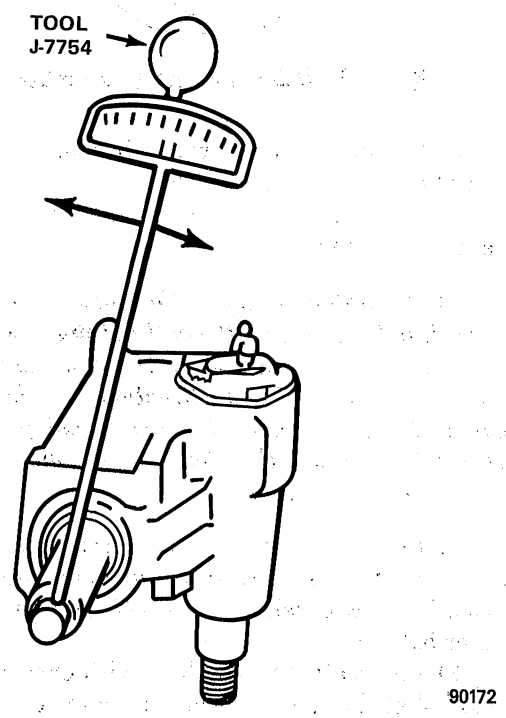

Fig. 2K-17 Adjusting Pitman Shaft Overcenter Drag Torque

(6) Hold adjuster screw in position using screwdriver and tighten adjuster screw locknut to 23 foot-pounds (31 N•m) torque. Do not allow screw to turn when tightening locknut.

NOTE: *If the adjuster screw is allowed to turn when the locknut is tightened, the entire drag torque adjustment procedure will have to be performed once again.*

(7) Recheck overcenter drag torque and readjust if necessary.

SPECIFICATIONS

Manual Steering Gear Specifications

Gear-Type	Recirculating Ball
Ratio	24:1
Bearings	
Upper	Ball
Lower	Ball
Adjustments:	
Worm Bearing Preload	8 in-lbs. (0.90 N·m)
Pitman Shaft Overcenter Drag Torque	4-10 in-lbs. (0.45-1.13 N·m) in addition to 8 in-lbs. (0.90 N·m) worm bearing preload for a total of 16 in-lbs. (1.8 N·m) maximum
Adjuster Screw End Play	0.002 in. (0.05 mm)

80435A

Torque Specifications

Service Set-To Torques should be used when assembling components. Service In-Use Recheck Torques should be used for checking a pre-tightened item.

	USA (ft-lbs)		Metric (N·m)	
	Service Set-To Torque	Service In-Use Recheck Torque	Service Set-To Torque	Service In-Use Recheck Torque
Intermediate Shaft Coupling Clamp Bolt	45	40-50	61	54-68
Pitman Arm Nut	185	160-210	251	217-285
Steering Gear Mounting Bracket-to-Gear Bolts (CJ)	70	60-80	95	81-108
Steering Gear Mounting Bracket-toTie Plate Bolt (CJ)	55	50-60	75	68-81
Steering Gear Mounting Bolts (Cke., Wag., Trk.,)	70	60-80	95	81-108
Side Cover Bolts	30	25-35	41	34-47
Adjuster Screw Locknut	23	18-27	31	24-37
Worm Bearing Adjuster Locknut	90	70-110	122	95-149

All torque values given in foot-pounds and newton-meters with dry fits unless otherwise specified.

60704

Tools

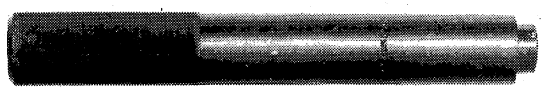

BEARING CUP INSTALLER J-5755

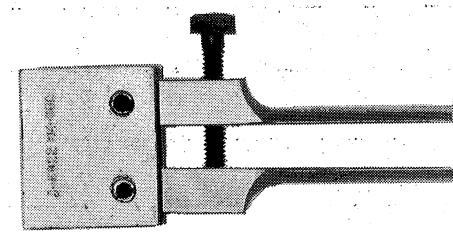

BEARING CUP PULLER J-5822

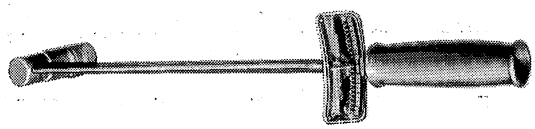

TORQUE WRENCH J-7754

SLIDE HAMMER J-2619-01

J-6632 PITMAN ARM PULLER

80439

NOTES